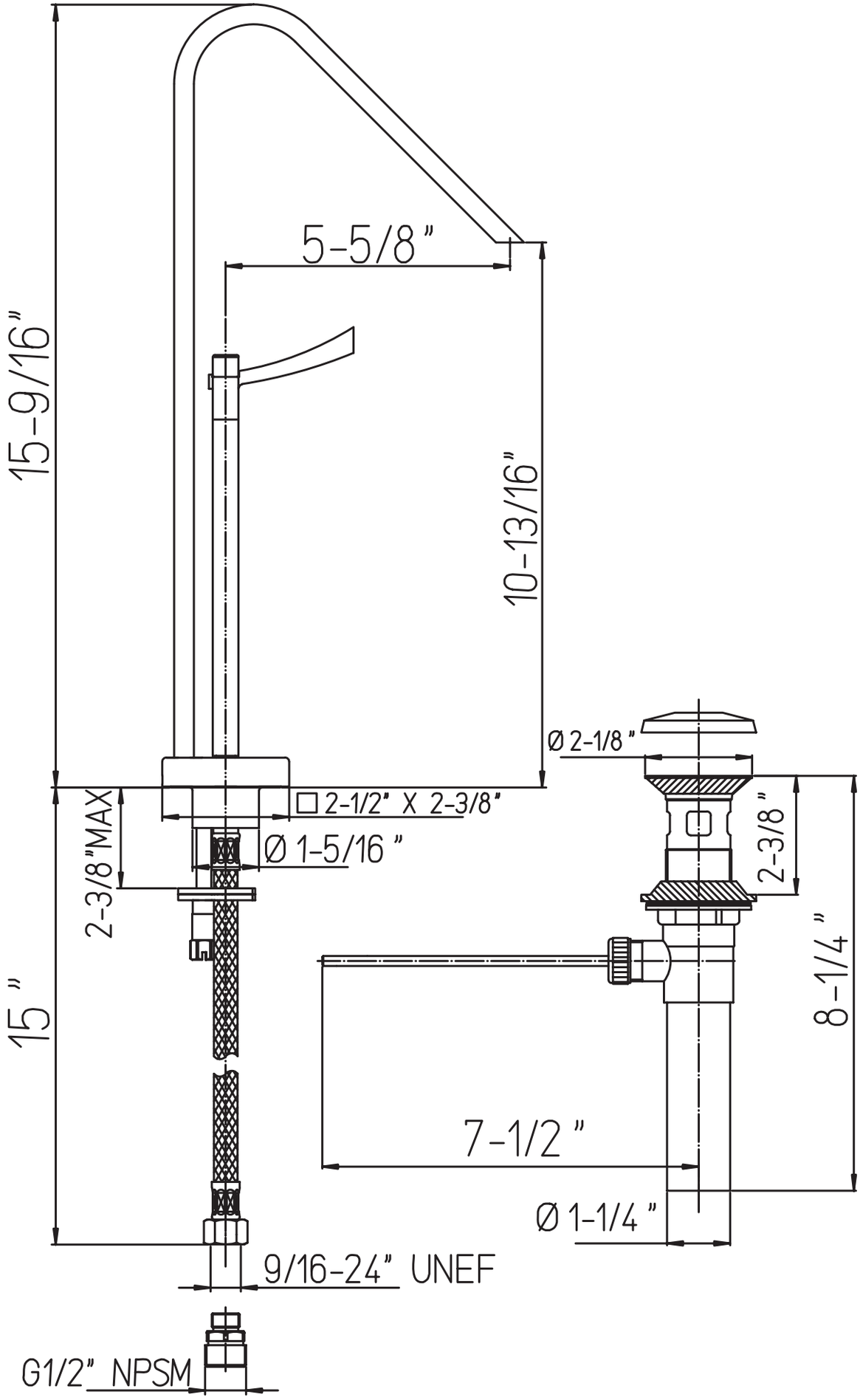
5-5/8"
15-9/16"
10-13/16"
Ø 2-1/8"
□ 2-1/2" X 2-3/8"
Ø 1-5/16"
2-3/8"MAX
2-3/8"
8-1/4"
15"
7-1/2"
Ø 1-1/4"
9/16-24" UNEF
G1/2" NPSM