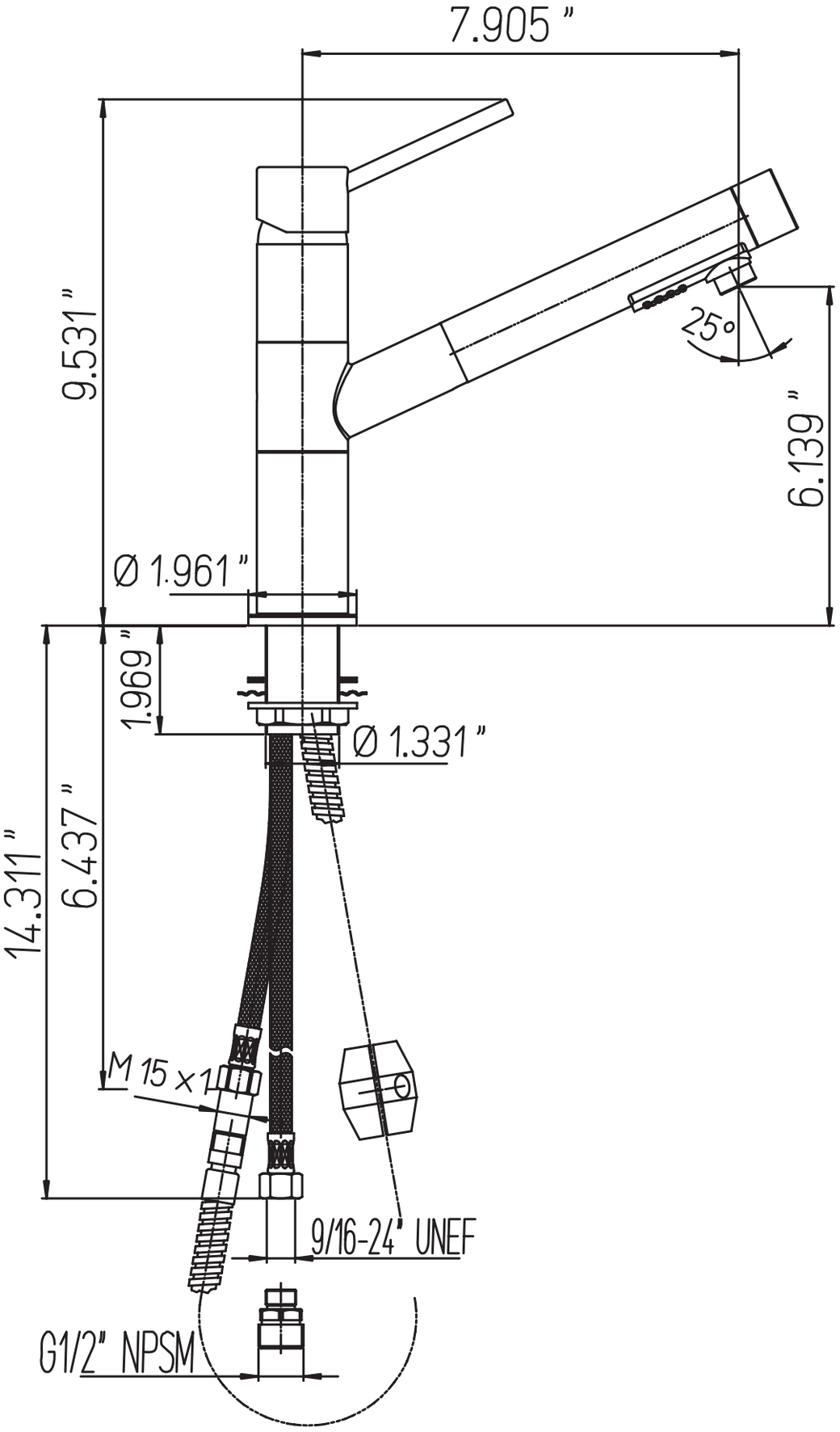
7.905 "
9.531 "
25°
6.139 "
Ø 1.961 "
1.969 "
Ø 1.331 "
14.311 "
6.437 "
M 15 x 1
9/16-24" UNEF
G1/2" NPSM